S855D/LS855D SHOVEL LOGGER

THE S855D SERIES IS A PURPOSE BUILT FOREST DUTY SHOVEL LOGGER.

The S855D series can be equipped with a grapple or the Tigercat 5195 directional felling head for felling and shovel logging with one machine.

THE S855D

The S855D shovel logger is a quick, nimble and powerful carrier designed to improve the efficiency and productivity of the entire harvesting system.

THE LS855D

Equipped with Tigercat's leveling undercarriage, the LS855D is an excellent choice for steep slopes.

Tigercat®
Tough • Reliable • Productive

CLAMSHELL STYLE RETRACTING ROOF ENCLOSURE AND NEAT, COMPARTMENTALIZED COMPONENT ARRANGEMENT.

Large swing-out doors for clear access to both sides of the engine and all daily service points. Hydraulic components are compartmentalized, separating the engine from the hydraulic pumps and valves.

EFFICIENT, HIGH CAPACITY COOLING SYSTEM

Automatic variable fan speed for improved fuel efficiency and automatic reversing cycle to clean the heat exchangers.

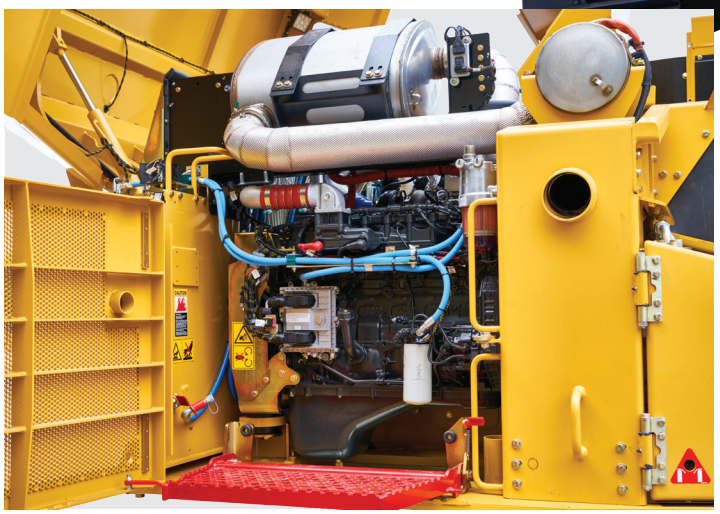

Swing-out door with service platform to quickly and easily access the engine.

Quick and clear access to the hydraulic system. Separated from the main engine enclosure area.

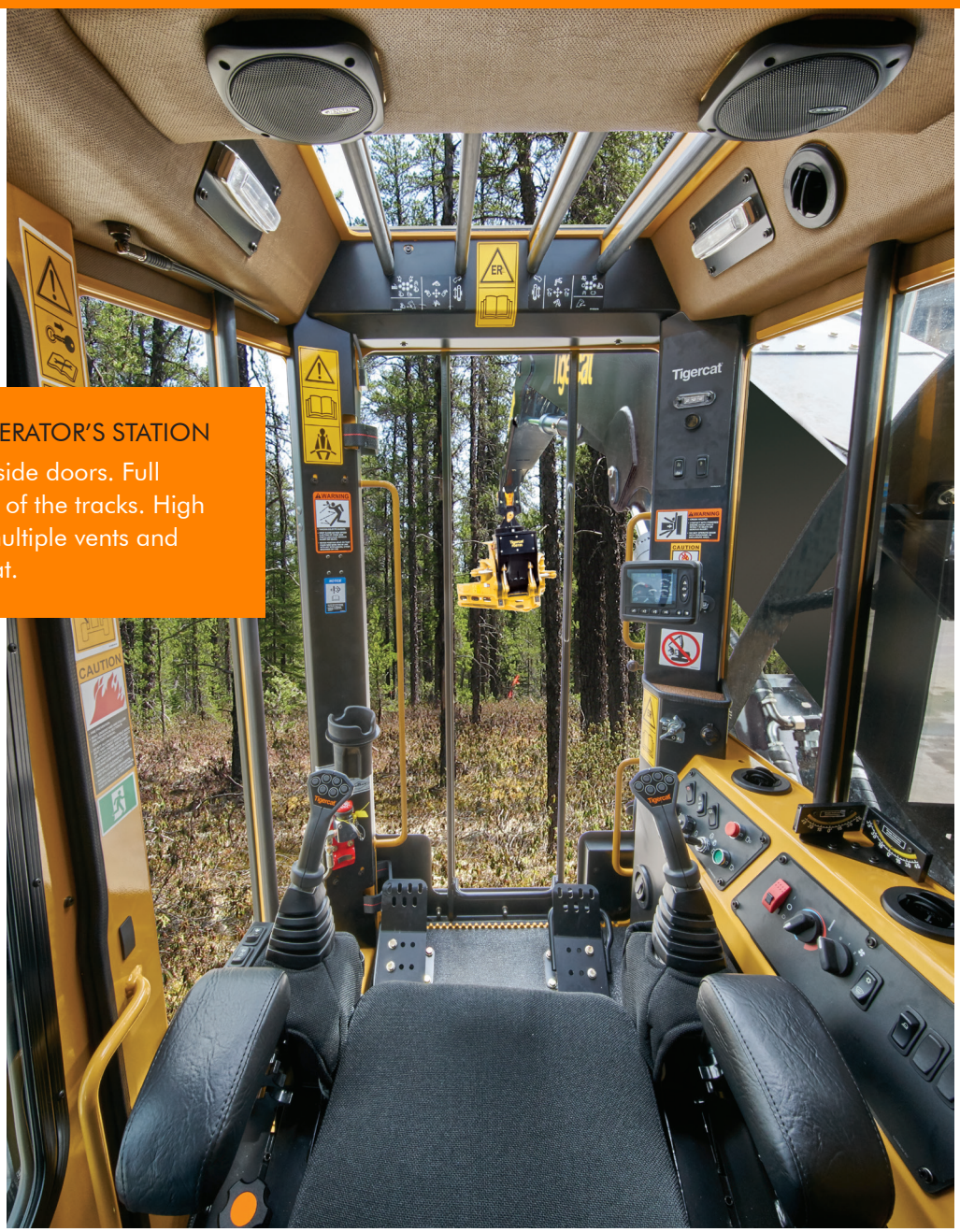

QUIET, CLIMATE CONTROLLED OPERATOR'S STATION

Industry leading cab with front and side doors. Full length front window for a clear view of the tracks. High output heater/air conditioner with multiple vents and extreme duty air-ride suspension seat.

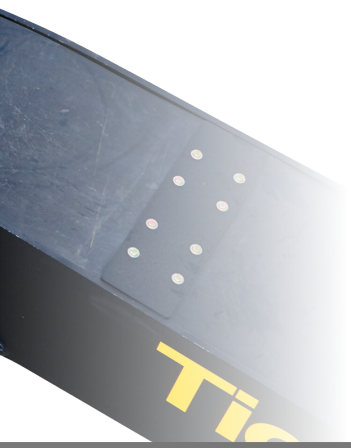

TIGERCAT FPT ENGINE TECHNOLOGY

Tigercat FPT Tier 2 and Tier 4f engines offer quick load response, low operating costs and high power density, combined with excellent fuel economy.

The second-generation common rail fuel injection system provides top performance in the most demanding applications.

Tigercat FPT Tier 4f emission technology is simple and reliable. The Tier 4f configuration meets emission standards without complex add-on components. The key is the patented selective catalyst reduction (SCR) after-treatment system.

Tigercat FPT engines offer improved reliability and lower long-term maintenance costs – the clear power choice for forestry and off-road industrial applications.

TIGERCAT**POWER.**
TIGERCAT**SUPPORT.**™

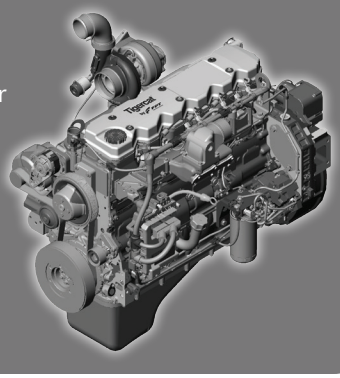

Tigercat® by FPT POWERTRAIN TECHNOLOGIES

HIGH SPEED, HIGH PERFORMANCE, HIGH EFFICIENCY.

ER® technology

Tigercat's patented ER® technology allows the machine operator to extend and retract the boom on a horizontal plane smoothly and quickly using a single joystick. But the benefit goes beyond reducing operator fatigue.

Key to ER technology is reduced energy consumption. The ER system transfers energy back and forth between the main and the stick boom functions, reducing the total energy required to move the boom system. This reduces demands for power, pump flow and system cooling. The result is increased productivity and reduced fuel consumption per unit of production.

EXTREME DUTY LEVELING SYSTEM

Field proven, millions of hours of operation. Long frames and wide stance for excellent stability. Thick steel plate, massive cylinders and tapered roller bearings. Unique patented geometry improves machine stability on sloping terrain.

TWIN SWING DRIVES

Powerful swing torque and reduced pinion loads for extended swing system life.

BOOM OPTIONS

LIVE HEEL OR FELLER DIRECTOR BOOM OPTIONS

The Tigercat S855D series is versatile for felling, bunching and shovel logging. When equipped with a live heel and grapple, it is a nimble, agile shovel logger well suited to steep terrain and sensitive soil conditions.

Equipped with the Tigercat 5195 directional felling head, the machine is well suited to steep slope felling, bunching and shoveling. The combination is an asset in large timber, avoiding the additional time, travel and repositioning required to double cut oversize trees with a fixed wrist felling head. The feller director configuration allows the machine to fell and extract independently or fell and bunch for a skidder or yarder.

SPECIFICATIONS

Tigercat®

	S855D	LS855D
DIMENSIONS WITH STANDARD TRACK SHOE		
WIDTH	3 400 mm (134 in)	3 430 mm (135 in)
LENGTH less boom	5 380 mm (212 in)	5 280 mm (208 in)
HEIGHT less skylight	3 330 mm (130 in)	3 710 mm (146 in)
GROUND CLEARANCE	690 mm (27 in)	710 mm (28 in)
WEIGHT less attachment	27 600 kg (60,900 lb)	35 600 kg (78,490 lb)
TAIL SWING over side	1 445 mm (57 in)	1 360 mm (54 in)
POWER		
ENGINE Tier 4f	Tigercat FPT N67 Tier 4f	Tigercat FPT N67 Tier 4f
▸ RATED	210 kW (282 hp) @ 2,200 rpm	210 kW (282 hp) @ 2,200 rpm
▸ PEAK	210 kW (282 hp) @ 2,200 rpm	210 kW (282 hp) @ 2,200 rpm
ENGINE Tier 2	Tigercat FPT N67 Tier 2	Tigercat FPT N67 Tier 2
▸ RATED	205 kW (275 hp) @ 2,100 rpm	205 kW (275 hp) @ 2,100 rpm
▸ PEAK	210 kW (282 hp) @ 2,000 rpm	210 kW (282 hp) @ 2,000 rpm
AIR FILTRATION	Precleaner and 2-stage engine air cleaner	Precleaner and 2-stage engine air cleaner
COOLING	Aluminum side-by-side radiator, oil cooler and charge air cooler Removable intake debris screen	Aluminum side-by-side radiator, oil cooler and charge air cooler Removable intake debris screen
FAN	Hydraulically driven, automatic variable speed, reversible	Hydraulically driven, automatic variable speed, reversible
FUEL CAPACITY	800 L (211 US gal)	800 L (211 US gal)
DEF CAPACITY	80 L (21 US gal)	80 L (21 US gal)
HYDRAULIC SYSTEM		
PUMP, MAIN	Piston	Piston
PUMP, SWING	Piston, closed loop, energy recovery	Piston, closed loop, energy recovery
PUMP, COOLING FAN	Piston	Piston
RESERVOIR	225 L (60 US gal)	225 L (60 US gal)
FILTRATION	(5) Spin-on, 7 micron full flow; (1) Water absorbing	(5) Spin-on, 7 micron full flow; (1) Water absorbing
CYLINDERS, HOIST	(2) 120 mm (4.7 in) bore	(2) 120 mm (4.7 in) bore
CYLINDERS, STICK	(2) 120 mm (4.7 in) bore	(2) 120 mm (4.7 in) bore
CYLINDER, HEEL	110 mm (4.3 in) bore	110 mm (4.3 in) bore
CYLINDERS, LEVELING	N/A	(2) 180 mm (7 in) bore
HORSE POWER CONTROL	Electronic speed sensing; All-speed antistall	Electronic speed sensing; All-speed antistall
UNDERCARRIAGE		
TRACK FRAMES	F6-140 heavy-duty forestry Integral track guides/ramp angles	R7-150L-2 super-duty forestry leveling Integral track guides/ramp angles
TRACK CHAIN	F8 203 mm (8 in) pitch sealed and greased	FH400 215 mm (8.5 in) pitch sealed and greased
FINAL DRIVE	(2) Piston motors with brake valves; Infinitely variable speed	(2) Piston motors with brake valves; Infinitely variable speed
TRACTIVE EFFORT	262 kN (59,000 lbf)	367 kN (82,600 lbf)
GEARBOX	Triple reduction planetary type with brake	Triple reduction planetary type with brake
FRONT IDLER	Hydraulic track adjuster; Spring shock absorber	Hydraulic track adjuster; Spring shock absorber
ROLLERS, UPPER	(2) D6D excavator type	N/A
SLIDES, UPPER	Optional, bolt-on	Bolt-on
ROLLERS, LOWER	(9) D6 single/double flange tractor type	(10) FH400 excavator type
TRACK SHOE	610 mm (24 in) single/double grouser	610 mm (24 in) single grouser
▸ Optional	710 mm (28 in) single grouser tri-track 760 mm (30 in) double grouser tri-track 915 mm (36 in) triple grouser tri-track	710 mm (28 in) single grouser
LEVELING	N/A	20° forward; 7° rear; +/-15° side
BRAKES		
TRACK	Friction disc; Automatic spring applied, hydraulic release	Friction disc; Automatic spring applied, hydraulic release
SWING	Friction disc; Manual spring applied, hydraulic release	Friction disc; Manual spring applied, hydraulic release
ROTATING UPPER		
SWING DRIVE	8 rpm variable speed; 360° continuous rotation; Double reduction, twin swing drive planetary gearboxes; Twin piston swing motors	
SWING BEARING	1 190 mm (47 in) ball circle diameter	
ENCLOSURE	Perforated plate on doors for ventilation; Hydraulic operated engine enclosure with manual back-up; Vandal protection; Smooth exterior Rear air intake for cooling	

	S855D	LS855D
ER BOOM SYSTEM SHOVEL LOGGER WITH LIVE HEEL		
MAXIMUM REACH	10 870 mm (428 in)	10 870 mm (428 in)
MINIMUM REACH	3 775 mm (149 in)	3 775 mm (149 in)
GRAPPLE	Rotobec 4552SHD	Rotobec 4552SHD
BARE PIN LIFT (full reach)	3 460 kg (7,625 lb)	3 460 kg (7,625 lb)
ER BOOM SYSTEM FELLER DIRECTOR		
MAXIMUM REACH	9 700 mm (382 in)	9 700 mm (382 in)
MINIMUM REACH	3 580 mm (141 in)	3 580 mm (141 in)
FELLING HEAD	Tigercat 5195	Tigercat 5195
BARE PIN LIFT (full reach)	5 125 kg (11,300 lb)	5 125 kg (11,300 lb)
ELECTRICAL		
BATTERY	(2) AGM, 12 v	(2) AGM, 12 v
ALTERNATOR	110 amp, 24 v	110 amp, 24 v
SYSTEM VOLTAGE	24 v	24 v
LIGHTING	(7) HID, (3) LED; (5) LED service lights	(7) HID, (3) LED; (5) LED service lights
OPERATOR'S STATION		
CAB	Insulated, pressurized and isolation mounted; A/C, heater, defroster with side-mount controls Full length polycarbonate windshield/entry door; Polycarbonate right-side and rear windows One-piece polycarbonate side door window with steel guarded tempered glass upper sliding section for ventilation Skylight or flat hatch; AM/FM digital stereo with CD player; (2) power points	
CONTROLS	Hydraulic proportional for boom/travel/swing with electronic travel speed control limiter; Electronic for leveling; Electric switch for swing brake and ER; Electronic control system with colour LCD display screen for machine monitoring and function adjustment	
SEAT	Full suspension air ride, fully adjustable, angled mounting; Armrest mounted Tigercat joysticks	
OTHER STANDARD EQUIPMENT		
	Fuel suction strainer; Alarm for track movement	Fuel suction strainer; Alarm for track movement
OPTIONAL EQUIPMENT		
	Counterweight kit; Cold weather kit; Bolt-on tool box R7-150EXP (extended pedestal) undercarriage	Cold weather kit Bolt-on tool box
ATTACHMENT		
	Flexible hydraulic system to accept grapples and directional felling heads	Flexible hydraulic system to accept grapples and directional felling heads

ER BOOM SYSTEM SHOVEL LOGGER WITH LIVE HEEL		
BARE PIN LIFT	Minimum reach	10 525 kg (23,200 lb)
	6,01 m (20 ft)	6 990 kg (15,400 lb)
	7,62 m (25 ft)	5 760 kg (12,700 lb)
	9,14 m (30 ft)	4 650 kg (10,250 lb)
ER BOOM SYSTEM FELLER DIRECTOR		
BARE PIN LIFT	Minimum reach	12 270 kg (27,000 lb)
	6,01 m (20 ft)	7 725 kg (17,000 lb)
	7,62 m (25 ft)	6 500 kg (14,300 lb)
	9,14 m (30 ft)	5 260 kg (11,600 lb)

ALL ENGINE POWER VALUES ARE QUOTED AT NET POWER, AS PER SAE J1349
TIGERCAT RESERVES THE RIGHT TO AMEND THESE SPECIFICATIONS AT ANY TIME WITHOUT NOTICE

S855D SHOVEL LOGGER

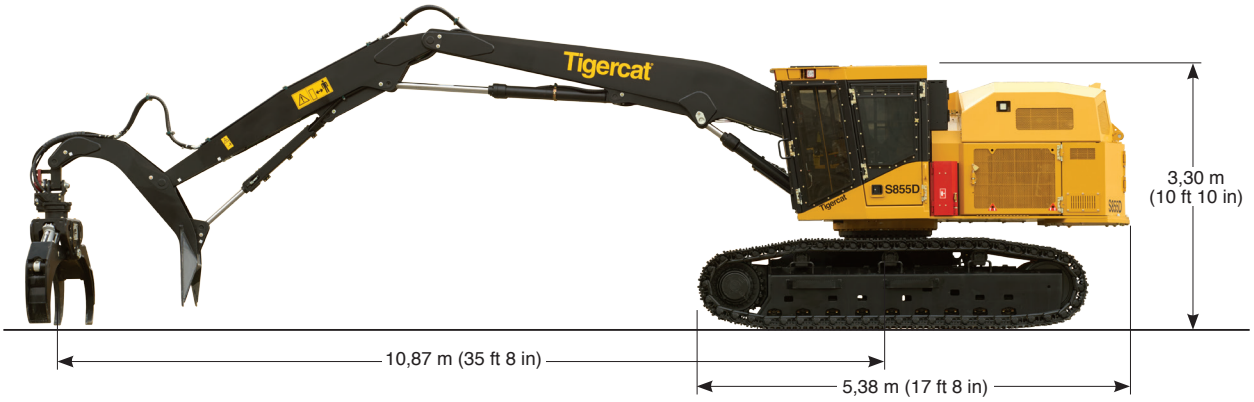

SHOWN WITH GRAPPLE AND LIVE HEEL BOOM CONFIGURATION

LS855D SHOVEL LOGGER

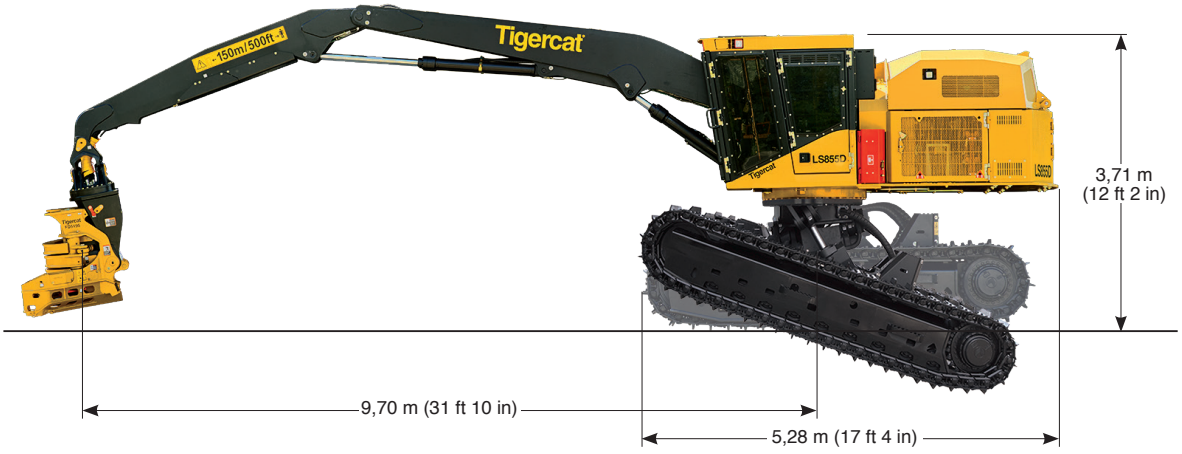

SHOWN WITH FELLER DIRECTOR BOOM CONFIGURATION

EMAIL	comments@tigercat.com
PHONE	519.753.2000
WEBSITE	www.tigercat.com
ADDRESS	54 Morton Ave. East, Brantford, Ontario Canada, N3R 7J7
MAIL	Box 637 N3T 5P9

© 2001 - 2017 Tigercat International Inc. All Rights Reserved. TIGERCAT, WIDERANGE, TURNAROUND, ER, EHS, LOW-WIDE and TEC, their respective logos, TOUGH RELIABLE PRODUCTIVE, TIGERCAT TV, "Tigercat Orange" and BETWEEN THE BRANCHES, as well as corporate and product identity, are trademarks of Tigercat International Inc., and may not be used without permission. TIGERCAT, TURNAROUND, WIDERANGE, EHS and ER, and their respective logos are registered trademarks of Tigercat International Inc.

S855D/LS855D 1.5 0417